NISSAFORS

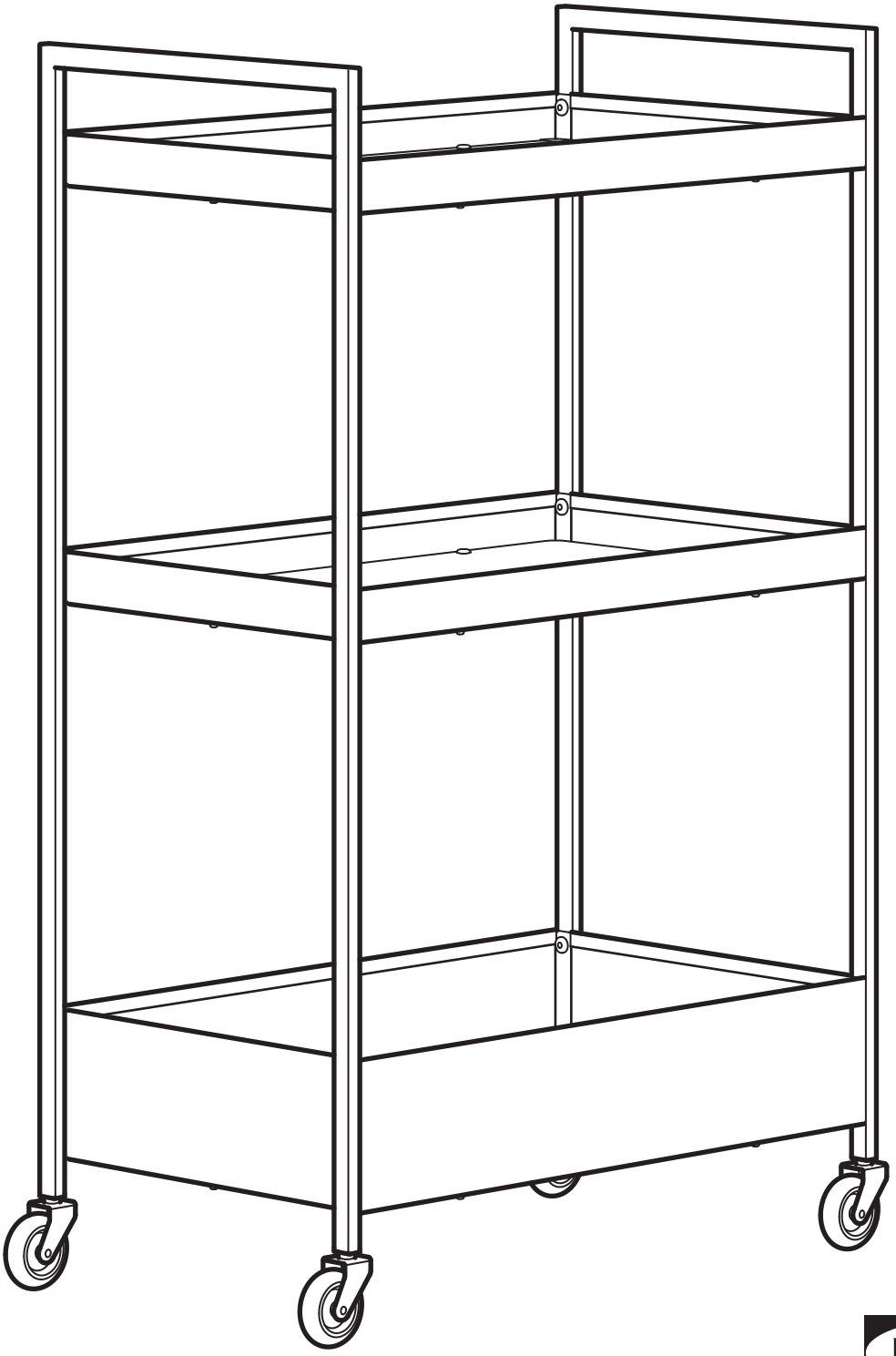

Design and Quality
IKEA of Sweden

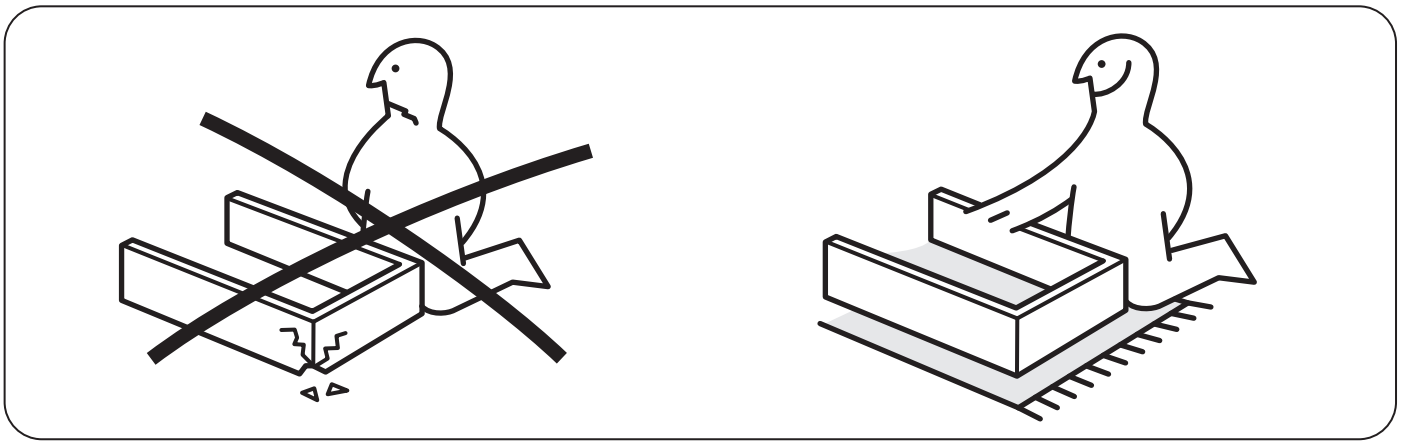

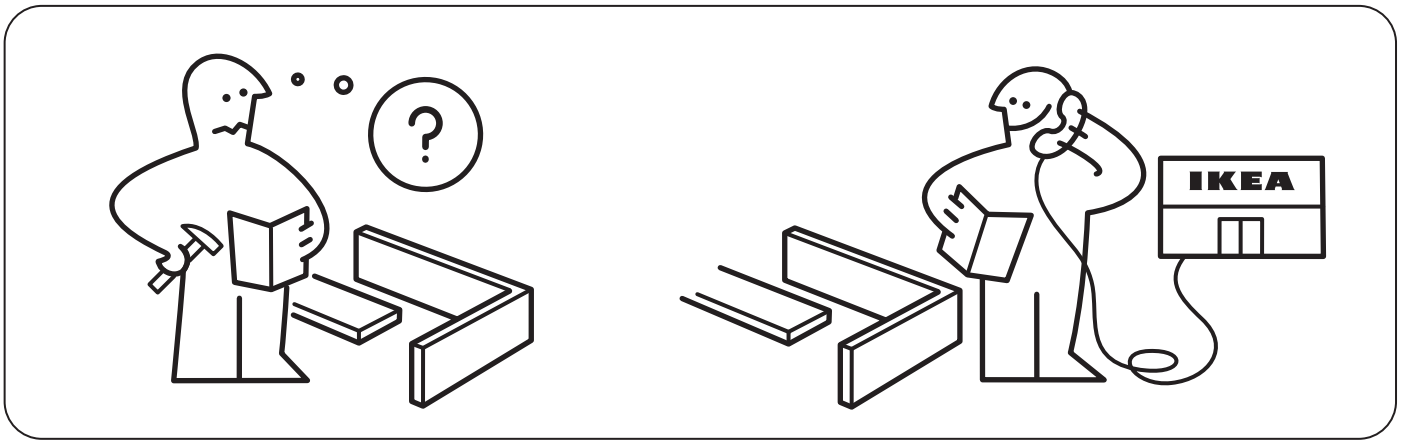
?
IKEA

190419
10051663

16x

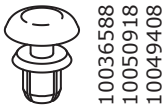
10036588
10050918
10049408

18x

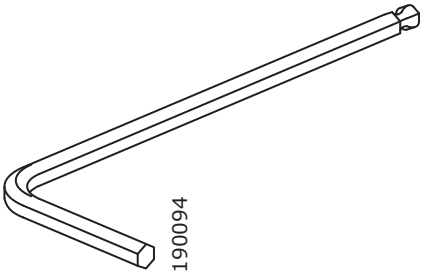
190094

1x

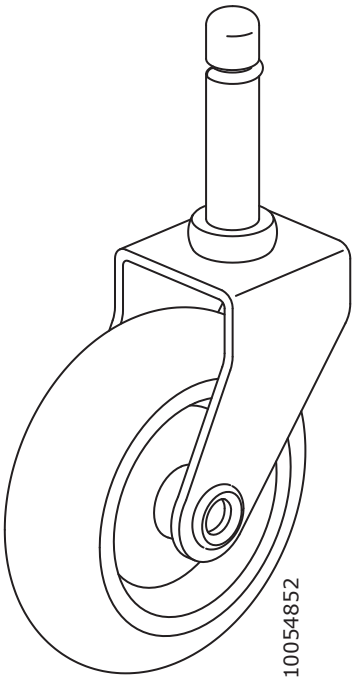
10054852

4x

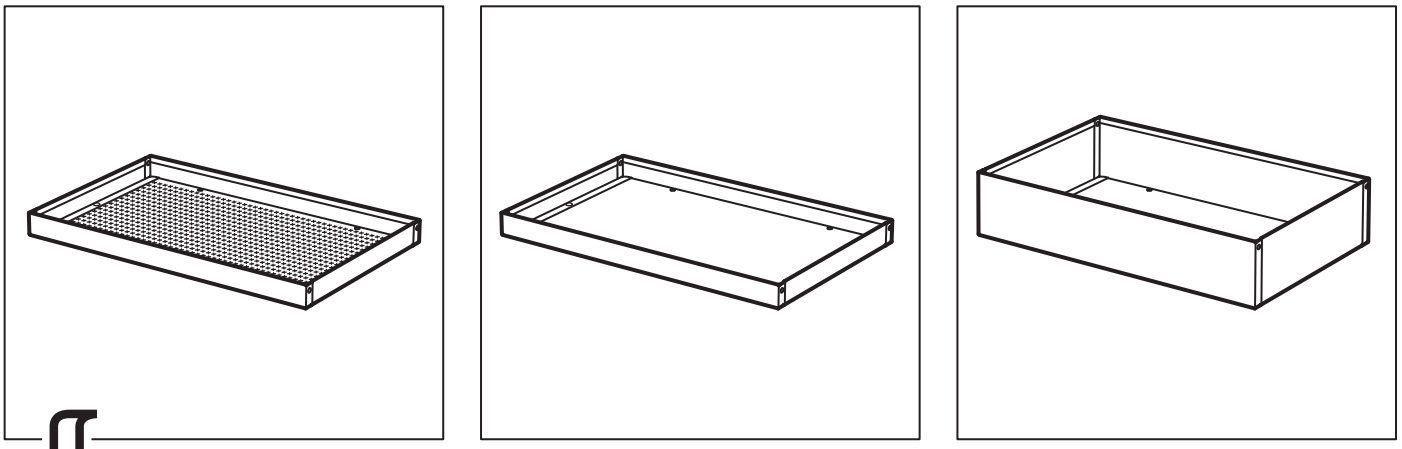

1

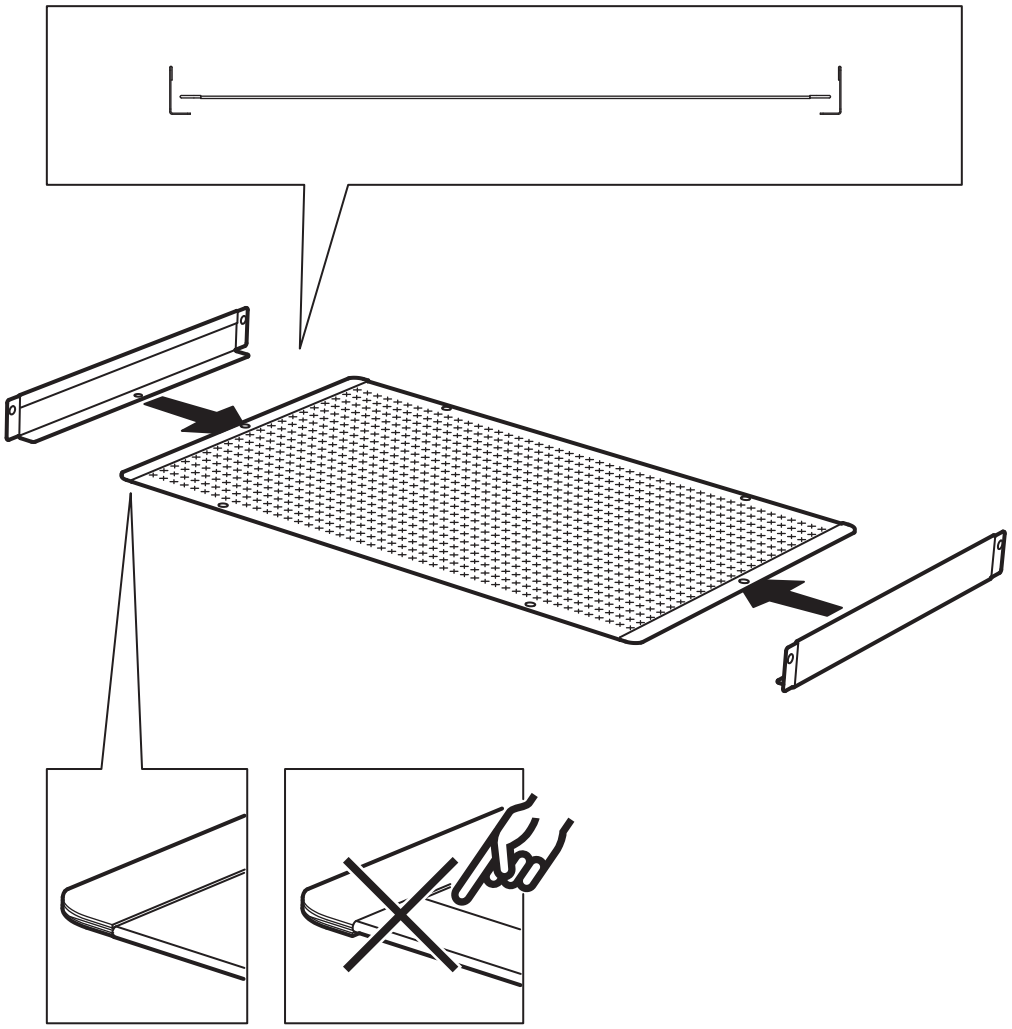

2

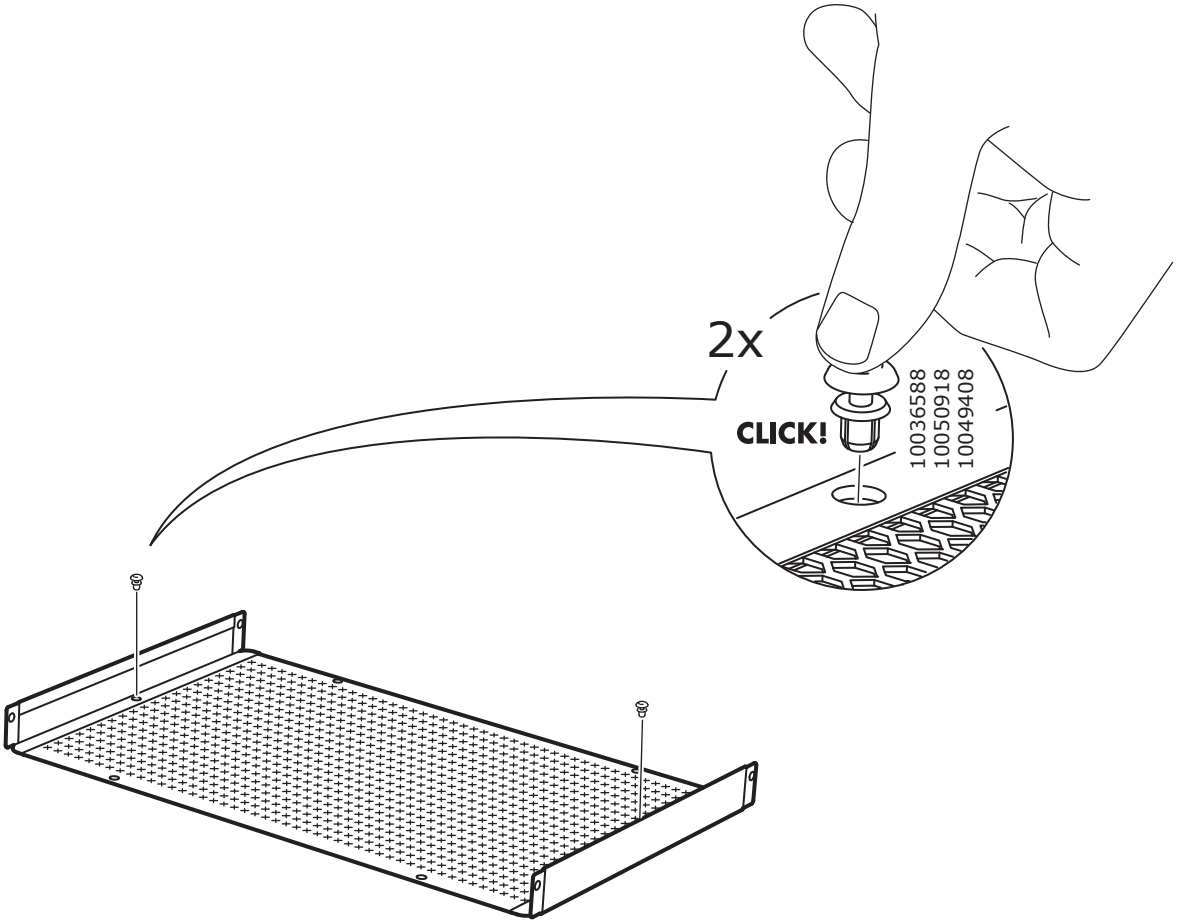

3

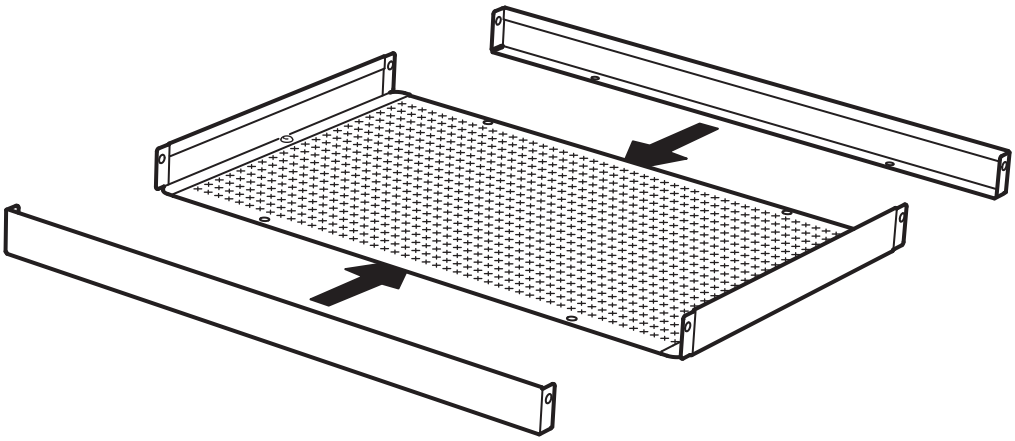

4

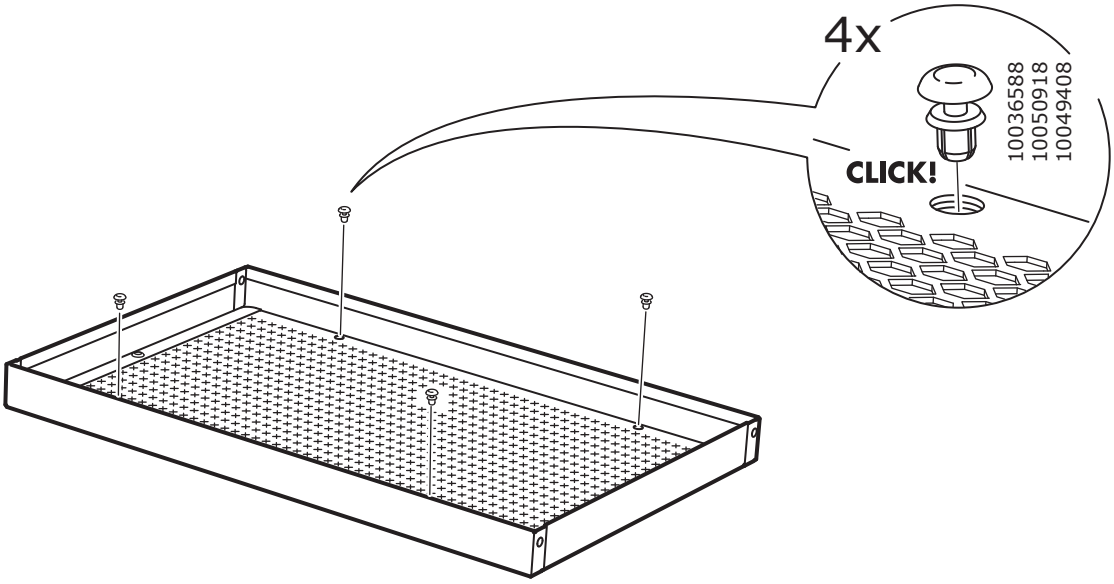
4x
10036588
10050918
10049408
CLICK!

5

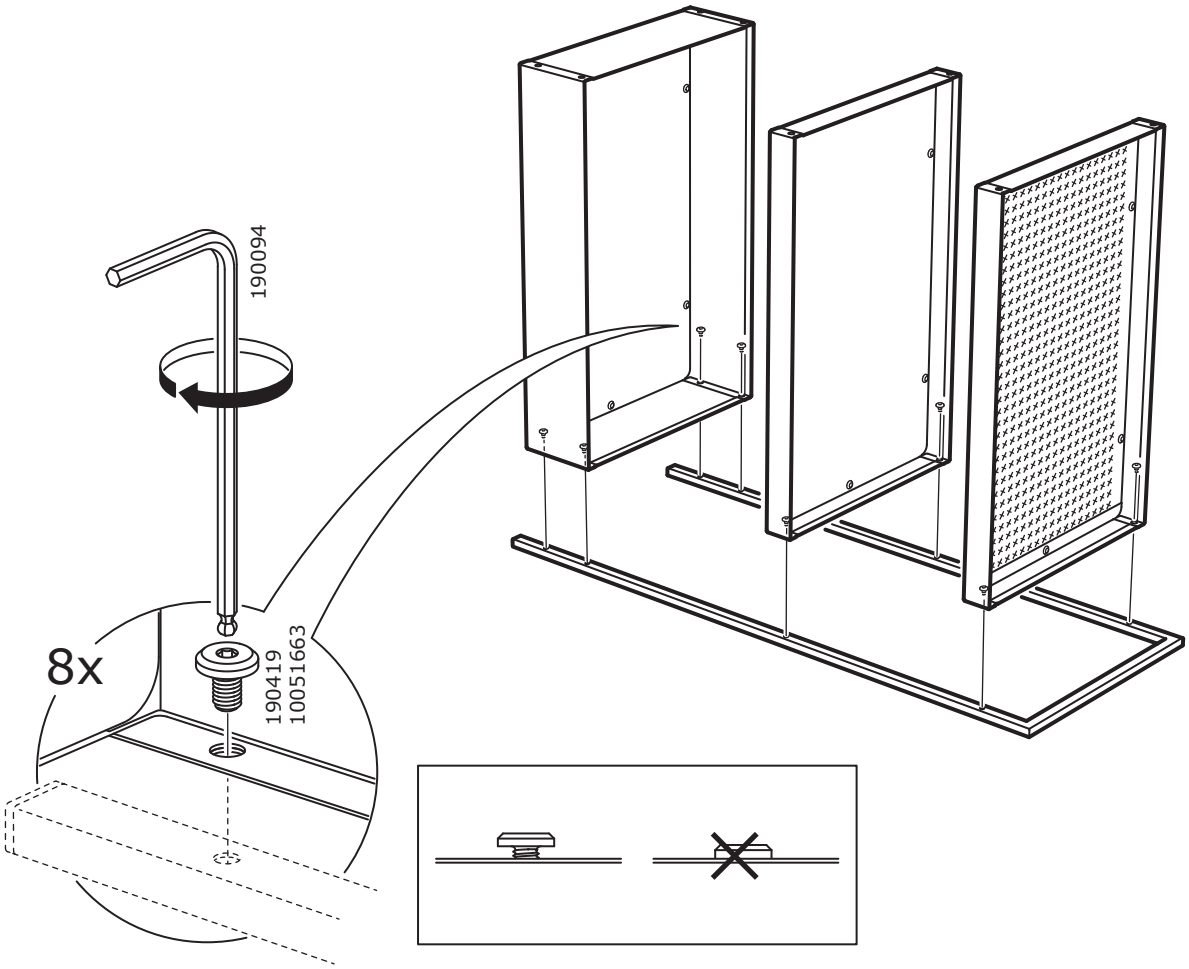
190094
8x
190419
10051663

6

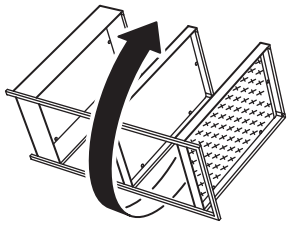

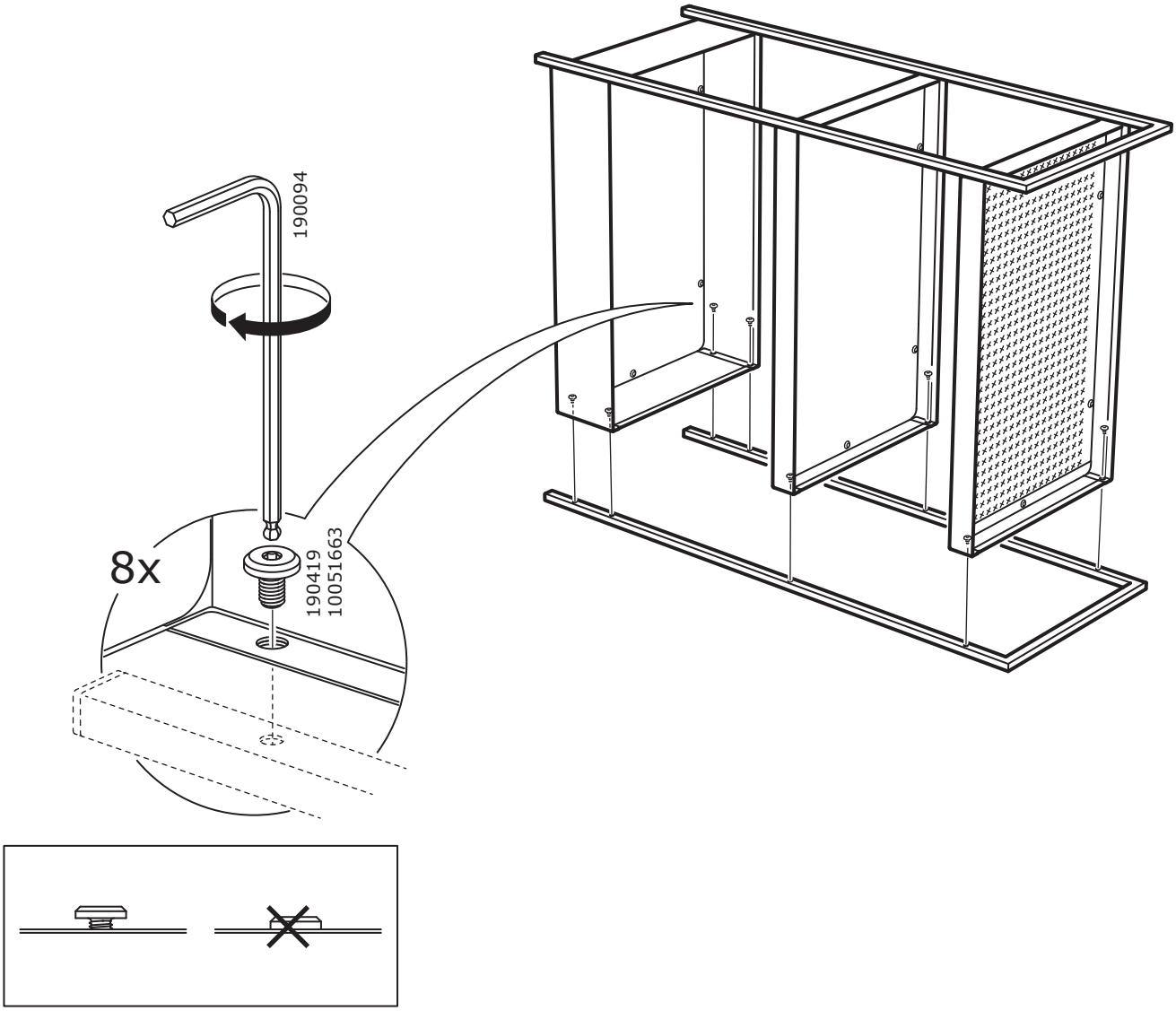

7

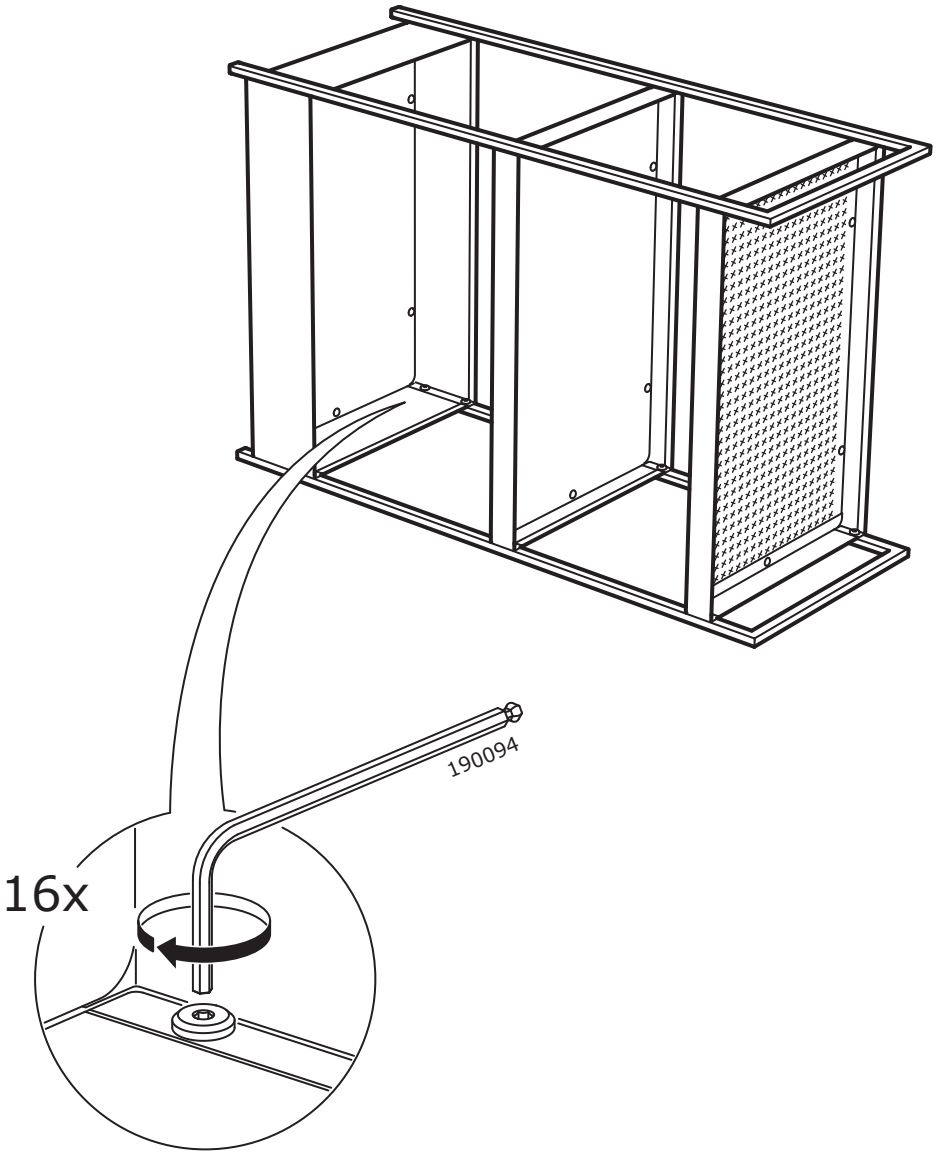

8

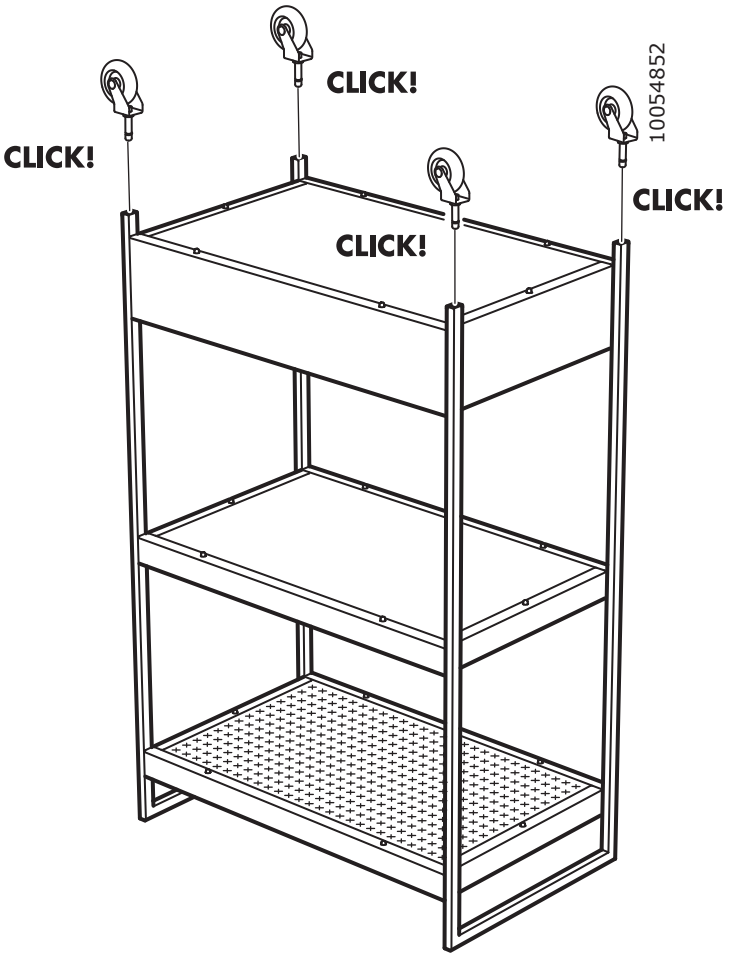

© Inter IKEA Systems B.V. 2018